SHOWDOWN

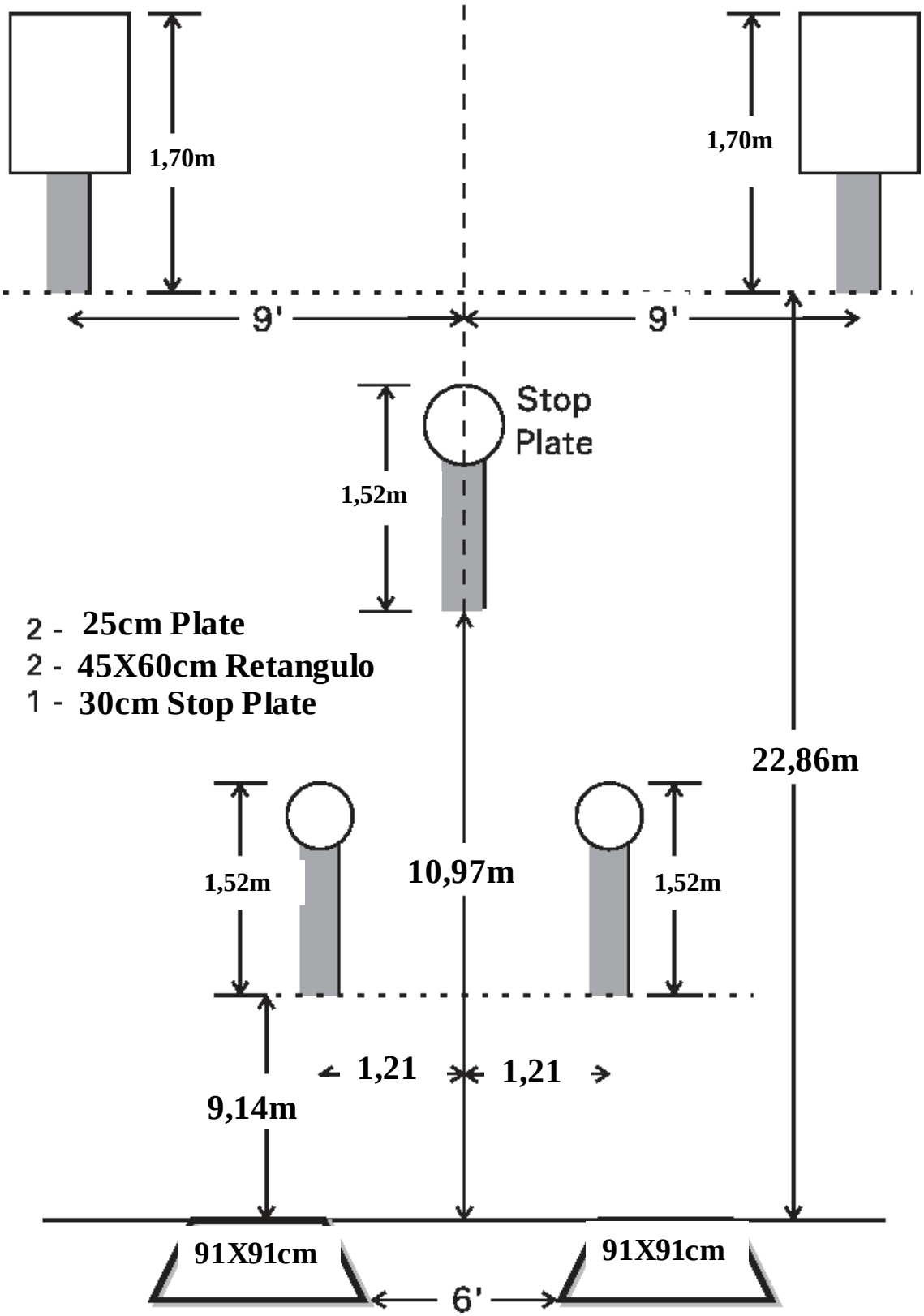
1,70m
1,70m
9'
9'
Stop
Plate
1,52m
2 - 25cm Plate
2 - 45X60cm Retangulo
1 - 30cm Stop Plate
22,86m
1,52m
10,97m
1,52m
1,21
1,21
9,14m
91X91cm
91X91cm
6'